THE DEVELOPMENT OF HYBRID SOLAR - BIOMASS PLANTS FOR THE PRODUCTION OF RENEWABLE ENERGY; TECHNICAL AND ECONOMIC ASSESSMENT

J. SERVERT, G. SAN MIGUEL and D. LÓPEZ

Universidad Politécnica de Madrid, E.T.S.I.I., Department of Energy Engineering and Fluidmechanics, c/ José Gutiérrez Abascal, 2, Madrid, 28006 (Spain)
g.sanmiguel@upm.es

EXTENDED ABSTRACT

Owing to environmental, economic and strategic considerations, the use of renewable energies is being promoted all around the world. In addition to overcoming economic and commercial barriers, meeting the ambitious objectives set by most countries will require the development of novel technologies capable of maximising the energy potential of different renewable sources. Solar and biomass derived energy is increasingly being used for the generation of electricity. However, solar energy plants necessarily suffer from the intermittency of the day/night cycles and reduced irradiation periods (winter, cloudy days), and biomass power plants have to confront the logistics associated with the continuous supply of very large amounts of a relatively scarce and seasonal fuel. The development of hybrid solar-biomass power plants may provide the answer to these limitations, maximising the energy potential of these resources, increasing process efficiency, providing greater security of supply and reducing overall costs.

This work provides a general assessment of technical, economic and environmental aspects associated with the production of electricity from existing Concentrating Solar Power (CSP) and biomass power plants. The paper also analyses alternative configurations for a 10 MWe hybrid CSP- biomass combustion power plant currently under development at Universidad Politécnica de Madrid (UPM). The results show that investment costs for hybrid CSP- biomass power plants are higher than for conventional CSP and biomass combustion plants alone. However, owing to the shared use of some of the equipment, this value is significantly lower (24% saving) than a simple addition of the investment costs associated with the two standard technologies. In contrast, effective operating hours and, therefore, overall energy generation, are significantly higher than in conventional CSP (2.77 times higher) and avoids the need for highly expensive heat storage system. Owing to the lower biomass requirements, hybrid plants may have larger capacities than standard biomass combustion plants, which implies higher energy efficiencies and a reduced risk associated with biomass supply.

Key words: hybrid technologies; renewable energy; Concentrating Solar Power (CSP); biomass; power stations.

1. INTRODUCTION TO CSP AND BIOMASS COMBUSTION PLANTS

In CSP plants, electricity is generated by heating a fluid (synthetic oil) to high temperatures (typically over 375ºC) using solar radiation that has been concentrated using mirrors or lenses. The hot fluid is used to produce superheated steam (375 ºC, 100 bar) that drives a Rankine cycle steam turbine connected to an electricity generator. Different configurations exist to concentrate the solar radiation, depending on the required fluid temperature, plant size and electricity generation technology (Wolff et al., 2008). Spain is becoming a world leader in this technology with one 11 MWe (tower technology) plant already in operation in Seville and several others projected or under construction that are expected to total 500 MW by 2013. As it happens in solar technologies, a key drawback in CSP plants relates to the intermittence of its power generation, due to the day/night cycles and also the periods of reduced irradiation (winter, cloudy periods). To overcome this problem, research is being conducted to develop efficient heat storage systems (molten salts, concrete, latent heat) and other energy storage alternatives (pumped hydroelectricity, hydrogen, etc). However, these technologies are excessively expensive and/or not sufficiently proven (Palgrave, 2008).

Biomass combustion is a mature technology with a large number of power plants in operation worldwide. These plants have been adapted to different sizes and fuels (agriculture and industrial by-products, energy crops). In Spain, *Acciona Energía* owns and operates a 25 MW power plant in Sangüesa (Navarra) that consumes 160,000 t of cereal straw and generates 200,000 MWh per year. The olive oil company Cooperativa Oleícola El Tejar (Córdoba) operates four power plants (48.3 MWe combined capacity) that generate 340,000 MWh a year of electricity from the combustion of olive oil derived waste (MITYC, 2008). The operation of these plants imply the challenge of generating a continuous supply of biomass throughout the year (Lopez-Gonzalez et al., 2007).

2. TECHNOLOGY ASSESSMENT OF CSP AND BIOMASS COMBUSTION

Both CSP and biomass combustion plants are based on the Rankine cycle where thermal energy is used to generate superheated steam and obtain electricity in a turbine-generator set. Below are described the main elements that make up conventional CSP and biomass power stations and the different specifications.

2.1. CSP plants

In Concentration Solar Power (CSP) plants, moving mirrors track the movement of the sun in order to concentrate the solar radiation onto the heating fluid. Different designs have been developed, the most common being parabolic troughs. As illustrated in Figure 1, the energy contained in the heat transfer fluid (HTF) is transferred to a water feed to generate superheated steam in a multiple stage heat exchange system. This steam is directed onto a turbine generator.

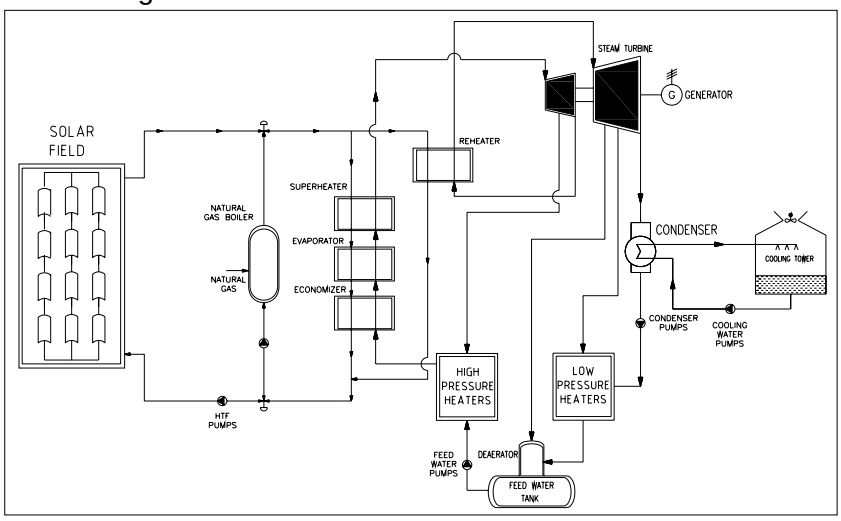

Figure 1: Basic process flow diagram of a CSP power plant.

The most important elements in CSP plants are the following (Partnode, 2006):

- The *Solar collectors*, made up of a supporting structure (to withstand elements), mirrors (where the solar beams are reflected and directed to the absorber tube), absorber tubes (containing the heat transfer fluid - HTF), and the driving systems (to track sun path). The solar system is usually backed up by a *natural gas boiler* that operates at different rates depending on the degree of solar irradiation.
- The *heat recovery boiler* is where heat from the HTF is used to generate superheated steam (375ºC, 100 bar). Most heat recovery boilers consist of several heat exchange stages, including an economizer, an evaporator and a superheater. Depending on the type of plant and cycle optimization, a reheater may be also included.
- *Auxiliary equipment*: Pumps used in CHP plants need to be specially designed to operate with HTF. Variable Frequency Drives (VFD) are used to control the pumping force exerted at every moment, in order to adjust HTF flows to the plant requirements.

2.2. Biomass combustion plant

Figure 2 illustrates the main components of a conventional biomass combustion power plant. The main component in a biomass combustion plant is the boiler. All the components regarding biomass storage and preparation area must be considered, but will not be specified in this document. The boiler is where biomass is burnt to generate superheated steam. Energy generated in the combustion process is used to heat the feed water (economizer), generate steam (evaporator) and superheat the steam to its final temperature and pressure (superheater).

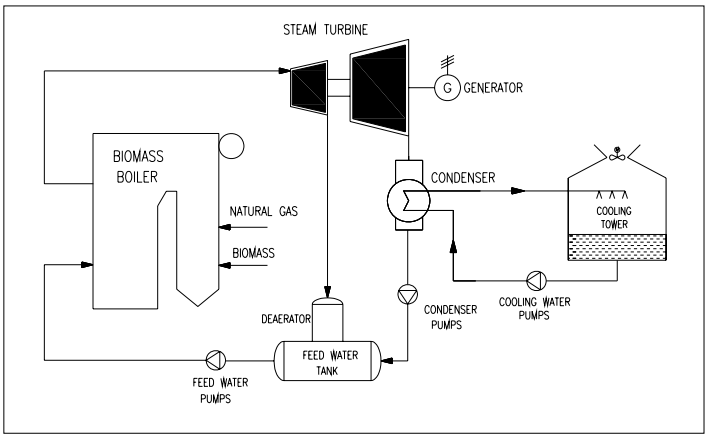

Figure 2: Basic process flow diagram of a biomass combustion power plant.

2.3. Common equipment

The thermal nature of the energy employed in both CSP and biomass combustion power plants make these two processes compatible and complementary (Chasapis et al., 2008), as described below:

- *Turbine-generator set*, where thermal energy is transformed first into mechanical energy and finally into electricity by means of a power generator. Since the working fluid is the same in both technologies (superheated steam), a unique turbine-generator set may be shared by a hybrid solar-biomass system.
- *Common elements in the Rankine cycle*: including not only pipes, valves and control devices, but also the condenser, cooling towers and the deaerator.
- *Common services*: feed water, compressed air and gas supplies, electrical devices and infrastructures are necessary both in CSP and biomass combustion plants.

3. ALTERNATIVE CONFIGURATIONS OF A CSP-BIOMASS HYBRID SYSTEM

In both CSP and biomass power plants, heat is produced as an intermediate source of energy to produce electricity in a turbine-generator set. This compatibility can be used to

design a power plant that uses CSP during the day and biomass during the night or cloudy days. Hence, CSP-Biomass combustion hybrid technology relies on the integration of a solar collector into the water/steam cycle of a biomass power plant. The combination of these two technologies benefits from increased overall energy efficiency, reduced investment for a given power (compared to CSP with molten salts heat storage), and longer operating hours (24 hours a day without the need for heat storage). Considering both Rankine cycles (biomass and solar thermal), two configurations may be considered to interconnect these two systems.

3.1. Substitution of the backup natural gas boiler for a biomass boiler

In this configuration, shown in Figure 3, the biomass boiler is designed to heat the HTF coming from the solar field instead of water. As it happened with the original natural gas boiler, this kind of design requires the biomass boiler to have a very efficient dynamic response in order to adapt its working point to the variability of solar irradiation conditions. For this purpose, the biomass boiler usually includes a rapid response natural gas backup system.

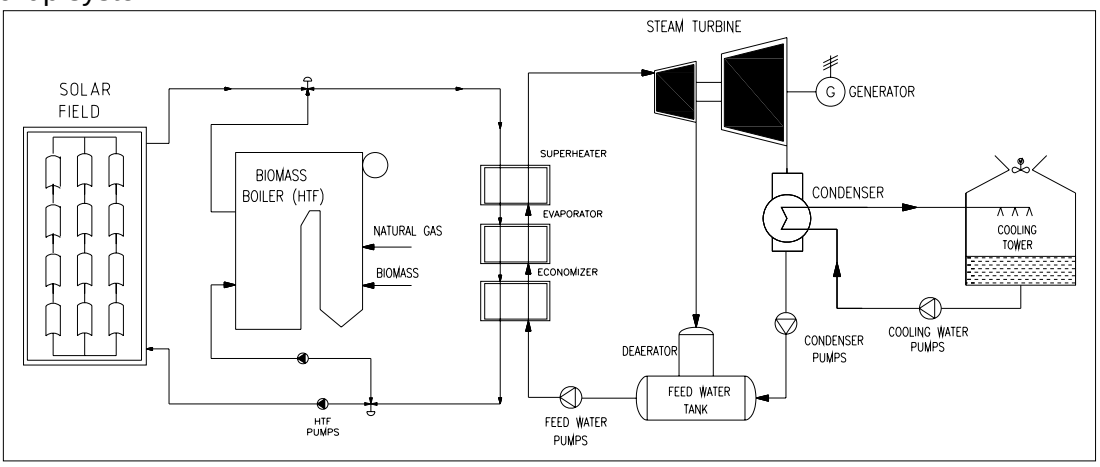

Figure 3: CSP-biomass hybrid configuration where the natural gas boiler has been substituted by a biomass boiler.

3.2 Connecting the solar field and biomass boiler in parallel

In this case (Figure 4), both the solar and the biomass systems have the capacity to generate superheated steam. Both streams are connected together for increased energy generation. In order to maintain appropriate steam conditions, the volume of water fed through the biomass boiler is adjusted depending on the solar irradiation and the steam generated by the solar field. The biomass boiler operates at different capacities, depending on the solar contribution, to produce a constant electricity output.

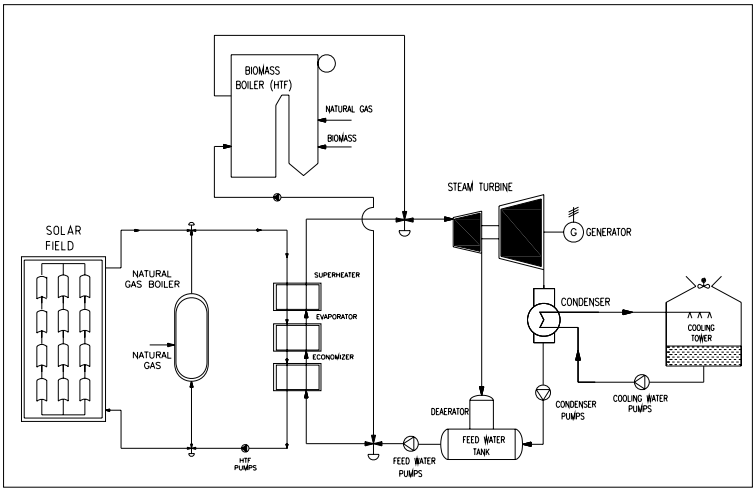

Figure 4: Solar-biomass hybrid configuration with CSP and biomass units set in parallel.

4. TECHNOLOGY ASSESSMENT OF CSP-BIOMASS HYBRID TECHNOLOGY

The first parameter that needs to be considered in the design of the power plant is power capacity, as both the economics and the energy performance of the plant are sensitive to scale factors. In general terms, larger plants benefit from higher energy efficiencies and take advantage of increasing economies of scale. However, large plants encounter difficulties to ensure a sustainable and stable supply of biomass feedstock. For the purpose of this analysis, a 10MW power plant has been selected as an optimum balance between performance and biomass supply.

The plant configuration based on the substitution of the backup natural gas boiler by a biomass boiler (see Figure 4) benefits from easier operation control and also from reduced construction costs, owing to the fact that no natural gas boiler is required. On the other hand, the main disadvantage for this option is the lower performance of the biomass cycle, due to the need to use heat exchangers for the HTF fluid. The boiler substitution configuration will be analysed in this work. From a conceptual standpoint, the key operating conditions of this hybrid plant would involve:

- Whenever possible, the power generation should be based on the CSP cycle, since the fuel (solar irradiation) is free and the operating costs are minimised.
- Natural gas will be used in the biomass boiler to provide primary energy during short transients, such as cloudy weather or transitions between biomass and CSP cycles.
- Biomass combustion will be used during longer periods when solar resource is unavailable, as for example during nights and winter days.

To estimate electric generation, a simplified model has been developed. The main considerations regarding this model are the following:

- Solar field heat production: an hourly calculation has been done for a model year with a Direct Normal Irradiation DNI = 2000 kWh/m^2. The calculation for heat production in the solar field is based on the following formula:

$$\Delta h_{HTF} = \frac{\dot{Q}_{SF} * A_{SCA} * L_{loop} * N_{loop}}{\dot{V}_{HTF} * \rho\,(T_{lm})}$$

  - Δh_{HTF} : HTF Increase of enthalpy.
  - $\dot{Q}_{SF}$: Heat collected in the solar field. Calculated by multiplying the hourly value by the solar field mean performance during a year (0,46) as calculated using SAM program 2.5.0.02 (NREL, 2008) using the same parameters as a conventional solar thermal power plant.
  - A_{SCA}: Aperture length of the solar collector. This value is 5,75m.
  - L_{loop}: Loop length. Value: 600m.
  - N_{loop}: Number of loops. This value needs to be optimized depending on the ratio production/cost. For this model, 30 loops have been considered.
  - $\dot{V}_{HTF}$: HTF volumetric flow in the solar field.
  - $\rho\,(T_{lm})$: HTF density at the mean logarithmic temperature in the Solar Field.

- Biomass production cycle: Since production based on biomass is a well-known process, a typical value for the boiler performance can be on the range of 88%.
- Rankine cycle performance: All performance considered is based on steam balances, and the following formula is applied (Kiameh, 2003):

$$\eta_R = \frac{Ep}{\dot{m}_s * (h_s - h_e)}$$

  - E_P: Electrical power produced. The calculated value resulted in 10296 kW.
  - $\dot{m}_s$: Steam flow in the heat recovery boiler.
  - h_s: Enthalpy of the steam at the heat recovery boiler outlet.
  - h_e: Enthalpy of the steam at the heat recovery boiler inlet.
  - η_R: Rankine cycle performance. Calculated value for the nominal point (100% load) = 30,6%.

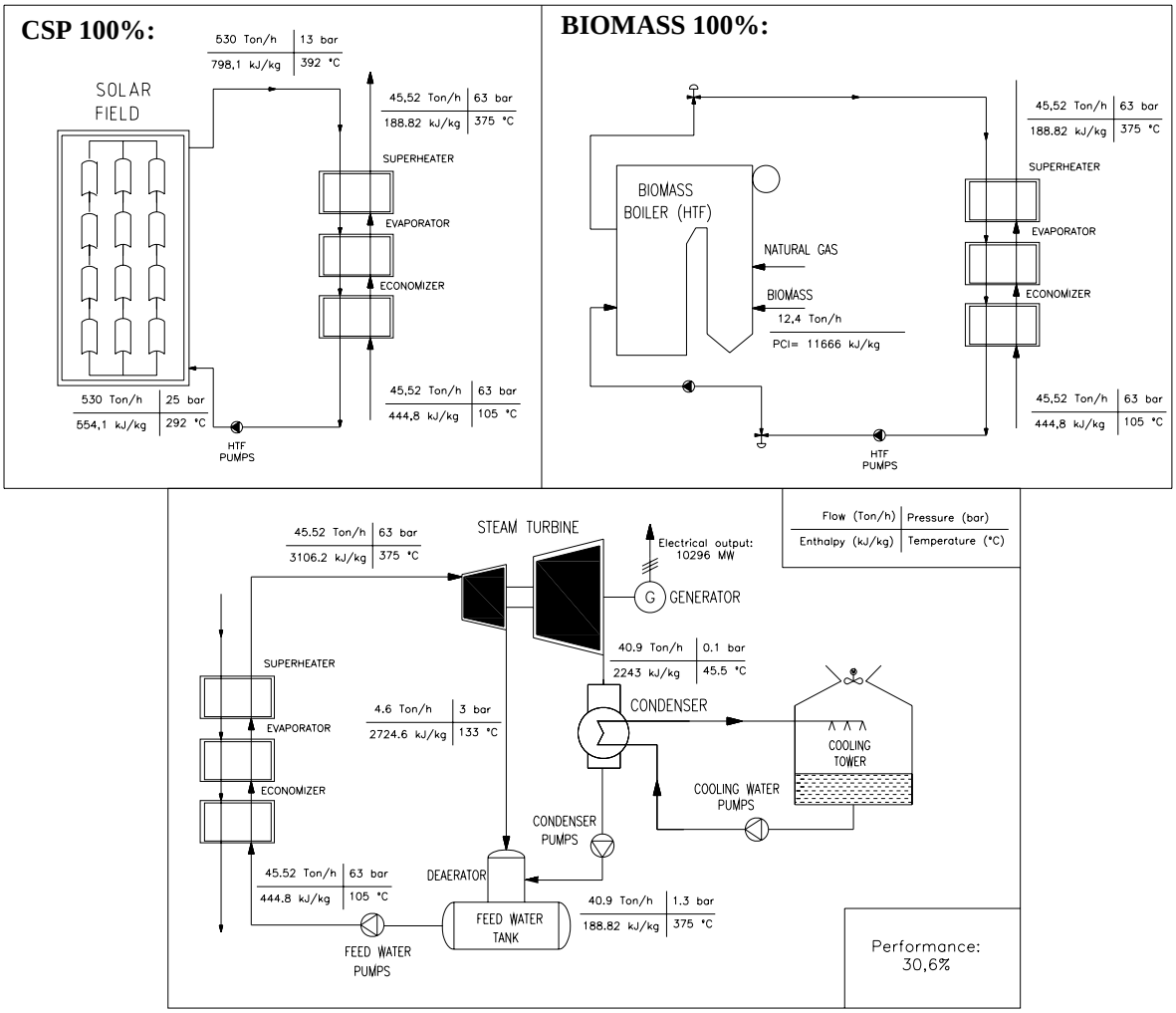

Figure 5: Detailed process flow diagram for a 10 MW Rankine cycle based on CSP, biomass combustion and hybrid CSP-biomass combustion plant.

Table 1: Estimated monthly electrical production (kWh) based on biomass combustion, CSP, and natural gas for a 10 MW hybrid plant.

	CSP	Biomass	Natural Gas	Total
January	434	5811	0	6245
February	711	5061	0	5773
March	1963	4806	0	6769
April	1942	4629	0	6571
May	2604	4417	0	7021
June	3064	1750	1485	6299
July	3218	0	2415	5634
August	2927	0	2558	5485
September	2120	4514	0	6634
October	1109	5409	0	6519
November	391	5630	0	6021
December	95	2869	0	2964
ANNUAL	20579	44897	6459	71934

The Rankine cycle conditions for the CSP, biomass and hybrid configurations are illustrated in Figure 5 and the estimated monthly electrical generation is shown in Table 1. Based on standard irradiation conditions, the results in Table 1 show a maximum CSP capacity during the summer period (3218 kWh in July), during which time the biomass unit is completely stopped. In contrast, the biomass reaches over 91 % of the energy contribution during the winter months. The overall energy output would remain relatively stable throughout the year at between 5500-7000 kWh.

5. ECONOMIC ASSESSMENT

5.1. Initial investment costs

As shown in Table 2, investment costs per unit power installed are higher for the hybrid plant (6200 €/kW) than for the CSP (5000 €/kW) or biomass (3200 €/kW) technologies. However, the synergies discussed above lead to a 24 % saving from the simple addition of the two standard technologies.

Table 2: Initial investment costs of the different technologies for a 10 MW plant.

CSP Plants			Biomass combustion plants			Hybrid biomass-CSP plants		
			Biomass treatment plant	400	€/MW	Biomass treatment plant	400	€/MW
			Biomass boiler	800	€/MW	Biomass boiler	800	€/MW
Solar Field	2300	€/kW				Solar Field	2300	€/kW
Heat recovery boiler	200	€/kW				Heat recovery boiler	200	€/kW
Heat transfer system	200	€/kW				Heat transfer system	200	€/kW
Turbogenerator set	750	€/kW	Turbogenerator set	750	€/kW	Turbogenerator set	750	€/kW
Heat storage	300	€/kW				Heat storage	300	€/kW
BOP	450	€/kW	BOP	450	€/kW	BOP	450	€/kW
Evacuation line	50	€/kW	Evacuation line	50	€/kW	Evacuation line	50	€/kW
Civil Works	400	€/kW	Civil Works	400	€/kW	Civil Works	400	€/kW
Assemb.+Commiss.	350	€/kW	Assemb.+Commiss.	350	€/kW	Assemb.+Commiss.	350	€/kW
TOTAL	5.000	€/kW	TOTAL	3200	€/kW	TOTAL	6200	€/kW

Table 3 illustrates that biomass combustion plants have the highest operating costs, owing primarily to the cost of the biomass fuel and labour requirements. In contrast, operating costs in CSP plants are one fifth of biomass combustion plants, due to the free nature of the solar resource. However, equivalent hours and, consequently, energy generation values are significantly lower in CSP plants.

Considering the Levelised Cost of Electricity (LCOE) values calculated for each plant design, it may be concluded that biomass power plants provide the cheapest alternative, with 116, 05 €/MWh. However, this alternative relies on the sustainable supply of large amounts (estimated 75000 t/year) of a biomass whose price and availability is not always secure. Biomass market prices have been growing in the last years, and it is expected that this trend will continue in the future. LCOE values for the hybrid plant (153,56 €/MWh) have been calculated to be 32 % higher than the biomass power plant but 36 % lower than the conventional CSP.

Table 3: Comparative economic and performance assessment of three 10 MWe power plants based on CSP, biomass combustion and hybrid technologies.

CSP Plants		Biomass combustion plants		Hybrid biomass-CSP plants	
Investment costs	50.000.000 €	Investment costs	32.000.000 €	Investment costs	62.000.000 €
Operating costs	1.102.400 €	Operating costs	5.329.425 €	Operating costs	4.641.310 €
Equivalent hours Production	2600 ha 26000 MWh	Equivalent hours Production	7500 h 75000 MWh	Equivalent hours Production	7193,4 h 71934 MWh
LCOE:	238,69 €/MWh	LCOE:	116, 05 €/MWh	LCOE:	153,56 €/MWh

LCOE = Levelised Cost of Electricity

6. CONCLUSIONS

A technical and economic assessment of Concentrating Solar Power (CSP) and biomass combustion evidences the complementarity of these two technologies in the generation of electricity. Solar energy plants benefit from the use of a freely available source of energy but suffer from the intermittency of the day/night cycles and also from periods of reduced irradiation (winter, cloudy days). In contrast, biomass power plants are comparatively less expensive to build but have to confront the higher cost and risks associated with the continuous supply of large amounts of a seasonal fuel.

This paper provides a technical and economic analysis of hybrid CSP-biomass combustion plants, in comparison with conventional CSP and biomass power technology. The results show that investment costs for hybrid CSP- biomass power plants are higher than for conventional CSP and biomass combustion plants alone. However, owing to the shared use of some of the equipment, this value is significantly lower (24% saving) than a simple addition of the investment costs associated with the two standard technologies. In contrast, effective operating hours and, therefore, overall energy generation, have been calculated to be is significantly higher than in conventional CSP (2.77 times higher). Hybridation of biomass also avoids the need for highly expensive heat storage system in conventional CSP. The main advantages in comparison with a biomass plant are: the increase of renewable energy which may be produced in an area and the fact that around 1/3 of total output relays on a free reliable source of primary energy, thus reducing the risk associated with biomass supply.

Finally, the use of common equipment and the combined performance of the two technologies leads to a lower Levelised Cost of Electricity (LCOE) in hybrid plants than the simple addition of the weighted LCOE values obtained from independent biomass and CSP output contributions.

REFERENCES

1. D. Chasapis, V. Drosou, I. Papamechael, A. Aidonis, R. Blanchard (2008) *Monitoring and operational results of a hybrid solar-biomass heating system*, Renewable Energy, 33 (8), 1759-1767
2. P. Kiameh (2003). *Power generation handbook: selection, applications, operation, and maintenance*. New York: McGraw-Hill, cop. 2003.
3. López-González L.M, Sala J.M, Mínguez-Tabarés J.L, López-Ochoa L.M.(2007) *Contribution of renewable energy sources to electricity production in the autonomous community of Navarre (Spain): A review*, Renewable and Sustainable Energy Reviews, 11 (8), 1776-1793
4. MITYC (2008) *La energía en España 2007*, Ministerio de Industria, Turismo y Comercio (MITYC). http://www.mityc.es/Balances/Seccion/Publicaciones/PublicacionesBalances/
5. NREL (2008). *Solar Advisor Model 2.5.0.2*. On line at: https://www.nrel.gov/analysis/sam/.
6. R. Palgrave (2008) *Innovation in CSP*, Renewable Energy Focus, 9 (6), 44-49
7. A.M. Partnode (2006). *Simulation and Performance Evaluation of Parabolic Trough Solar Power Plant*. University of Wisconsin-Madison.
8. G. Wolff, B. Gallego, R. Tisdale, D. Hopwood (2008) *CSP concentrates the mind,* Renewable Energy Focus, 9 (1), 42-47